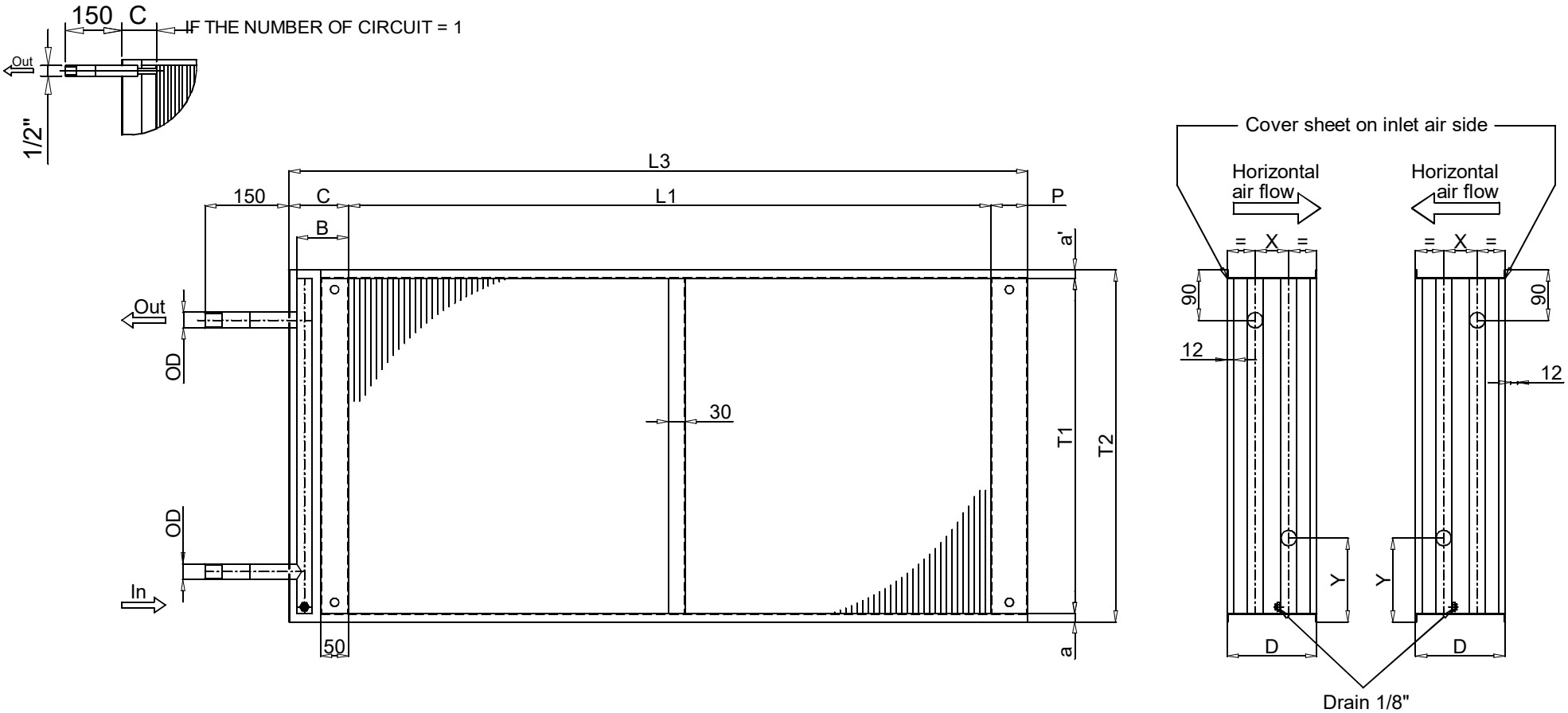

Intermediate plate for coils with:
R = 1 and L1 > = 1500 mm
R > 1 and L1 > = 2000 mm

Top and bottom plates without counterfolds

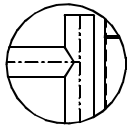

if a+1/2ø connection < 90

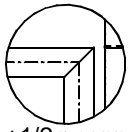

if a+1/2ø connection => 90

N.	DESCRIPTION	THICKNESS	MATERIAL	NOTES
8				
7				
6				
5	CONNECTIONS		ASME SA106M Gr.B	
4	HEADERS		Cu-DHP EN 12735-1	
3	FRAME	DBM Std.	FeZn - DX51D+Z EN10327	
2	FINS	0.11	Al-Alloy 8006	
1	EXCHANGE TUBES	0.35	Cu-DHP EN 12735-2	

MATERIALS AND THICKNESS

REV.	DESCRIPTION	PREP'D	CHK'D	APPR'D	DATE
0	FIRST ISSUE	LP	LP	SB	17/09/20

OPERATING CONDITION		
TUBE SIDE	Pmax	10 barg
	Tmin/Tmax	-10°/100°C
FIN SIDE	Pmax	- barg at -°C
	Tmin/Tmax	-°--°C at - barg
TEST PRESSURE		24 barg
FILE		STD.-AHU-COOLING COILS.dwg

GENERAL TOLERANCES ACCORDING TO DBM-TOL-N-R00

[mm-A3]

CUSTOMER	SYSTEMAIR A/S
CODE	STANDARD DIMENSION - AHU - COOLING COILS
N. PIECES	INTERNAL FLUID
WEIGHT kg	VOLUME
ORDER N.	SCALE
OFFER N.	DRAWING N. PAGE 1 P3012
CONFIRMATION N.	AHU-COOLING COILS

IL PRESENTE DISEGNO E' DI PROPRIETA' ESCLUSIVA DELLA DBM S.p.A. ESSO NON PUO' ESSERE USATO, RIPRODOTTO, DISTRIBUITO O ESIBITO SENZA L'ESPRESSO CONSENSO DELLA DBM S.p.A.
THIS DRAWING IS EXCLUSIVE PROPERTY OF DBM S.p.A. IT MUST NOT BE USED, REPRODUCED, DISTRIBUTED OR EXHIBITED WITHOUT EXPRESSED PERMISSION OF DBM S.p.A.

D.B.M. SpA Via U.La Malfa, 10 28040 Varallo Pombia-Novara-ITALY Tel. +39 0321 956794 Fax +39 0321 957266 e-mail: info@dbmcoils.com